Hoover®

Upright Vacuum Cleaner

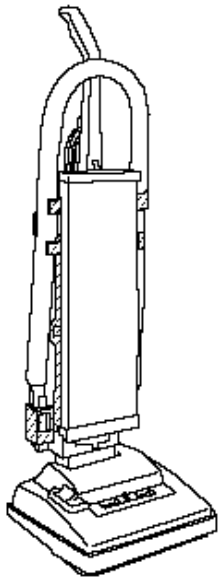

Review this manual before operating cleaner

Index

Assembling Cleaner.....2-6
Cleaner Descriptions.....6

How To Use
Cleaning Tools.....8-9
To Clean Stairs 8
Upright Cleaner.....6-8
If You Have a Problem.....13
Important Safeguards 1
Lubrication 12
Maintenance
Authorized Service.....13
Replacing Agitator 12
Replacing Belt.....10-11
Replacing Headlight.....10
Replacing Filter Bag.....9-10
Unpacking Cleaner 2
Warranty 13

© 2001 The Hoover Company

Owner's Manual

ENGLISH ➜ pp.1-13
ESPAÑOL ➜ pág 14-20
FRANÇAIS ➜ p. 21-27

Thank you for selecting a HOOVER product.

This cleaner was inspected and packaged carefully before being shipped from the factory. If you should happen to need assistance during assembly or operation:

Visit us online at **www.hoover.com** to find the service outlet nearest you (click on "Service" button) or call **1-800-944-9200** for an automated referral or authorized service outlet locations (U.S. only) or call **1-330-499-9499** to speak with a representative in our Consumer Response Center.

Important Safeguards

When using an electrical appliance, always follow basic precautions, including the following:

READ ALL INSTRUCTIONS BEFORE USING THIS APPLIANCE

Warning: **To reduce the risk of fire, electric shock, or injury:**

- **Do not use outdoors or on wet surfaces.**
- **Close supervision is necessary when any appliance is used by or near children. Do not allow vacuum cleaner to be used as a toy or to run unattended at any time.**
- **Keep hair, loose clothing, fingers, feet and all parts of body away from openings, rotating agitator and other moving parts. Do not operate cleaner in bare feet or when wearing open toe shoes or sandals.**
- **Do not pick up anything that is burning or smoking, such as cigarettes, matches, or hot ashes.**
- **Do not use to pick up flammable or combustible materials such as gasoline or fine wood sandings or use in areas where they may be present.**
- **Avoid picking up hard, sharp objects with the cleaner. They may damage the cleaner and the bag.**
- **Always turn off this appliance before connecting or disconnecting hose.**
- **Do not use without dust bag or filters in place. Change bag frequently when picking up very fine materials such as powder.**
- **Use extra care when cleaning on stairs.**
- **Do not put any object into openings. Do not use with any opening blocked; keep free of dust, lint, hair, or anything that may reduce air flow.**
- **Do not pull or carry by cord, use cord as a handle, close door on cord or pull cord around sharp edges or corners. Do not run appliance over cord. Keep cord away from heated surfaces.**
- **Always disconnect cord from electrical outlet before servicing the cleaner.**
- **Unplug cleaner when not in use. Turn off all controls before unplugging.**
- **Do not unplug by pulling on cord. To unplug, grasp the plug, not the cord. Never handle plug or appliance with wet hands.**
- **The use of an extension cord is not recommended.**
- **Do not use with damaged cord or plug. If appliance is not working as it should, has been dropped, damaged, left outdoors, or dropped into water, take it to a Hoover Factory Service Center or Authorized Hoover Warranty Service Dealer (Depot).**
- **Use vacuum cleaner only for its intended use as described in the instructions. Use only attachments recommended by The Hoover Company; others may cause hazards.**

Save these instructions!

1. Assembling cleaner

It is extremely important to read and follow all instruction steps in order.

The assembled cleaner will look like this drawing.

If you need assistance with any step of the assembly or operation:

Visit us on-line at **www.hoover.com** to find the service outlet nearest you (click on the “Service” button) OR

Call **1-800-944-9200** for an automated referral of authorized service outlet locations (U.S. only) OR

Call 1-330-499-9499 to speak with a representative in our Consumer Response Center.

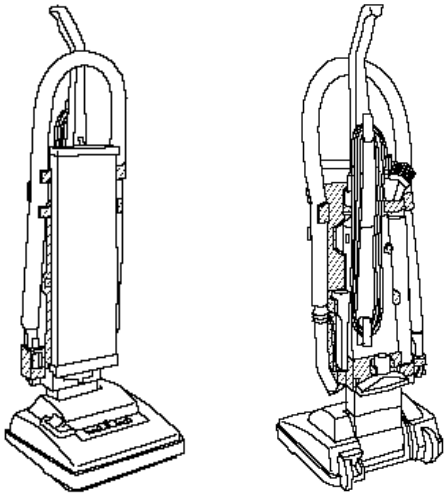

Carton contents

1-1

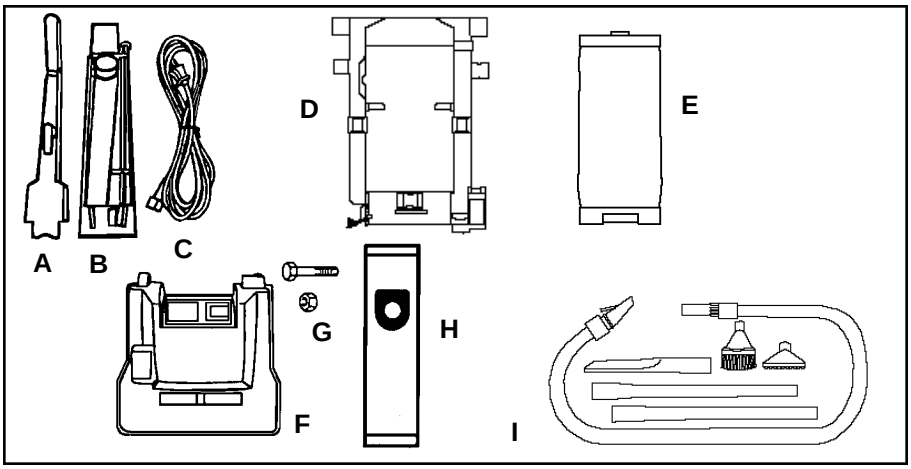

A.Upper handle
B.Lower handle
C.Cord
D.Tool rack
E.Outer bag
F. Cleaner body
G.Handle bolt and nut packet
(One extra nut included)
H. Filter bag
I. Hose, cleaning tools and wands
(some models come with one wand; others come with two)

Remove all parts from carton and identify each item shown.

Make sure all parts, especially small items, such as G, are located before disposing of cardboard packing.

This cleaner is intended for household use.

Fill in and retain

The model and serial number are located on the bottom of the cleaner. For your personal records, please enter the COMPLETE model and serial number in the spaces provided and retain this information.

Your cleaner is model_____

and has serial number_____

It is suggested that you attach your sales receipt to this owner’s manual. Verification of date of purchase may be required for warranty service of your HOOVER product.

Assemble handle

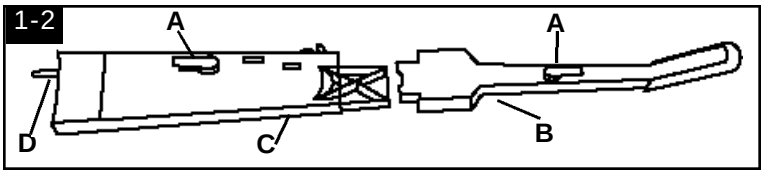

Place upper (B) and lower (C) handle sections on a flat surface with cord hooks (A) on top. With hands on sides of handle sections, push handle sections together firmly until they “click” into place.

***Do not press against the rod (D) extending from the lower handle. If the rod breaks or bends, the cleaner will not work properly. Do not push handle together with your hands on the ends of the sections.**

Attach cord

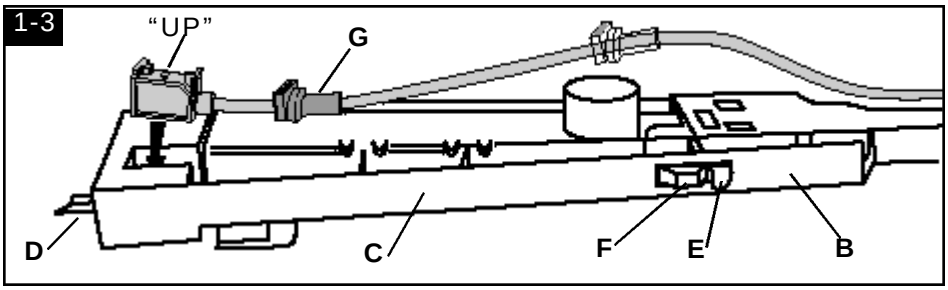

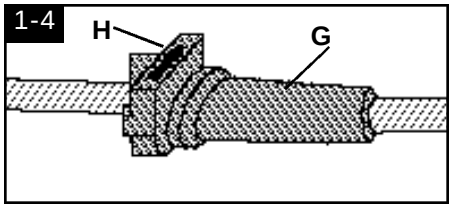

Rotate cord protector (G) on cord until you see its arrow (H).

Note: The **small red tab (E)** above the ON/OFF switch (F) is for **shipping purposes only** and may fall off during assembly. If it does not fall off, the tab will be removed during the final steps of assembly.

Turn handle over. Insert **large** rectangular end of cord into pocket in bottom of handle, with side marked “UP” visible.

Make sure rectangular end is pushed into handle as far as possible.

Slide cord protector (G) toward upper handle (B).

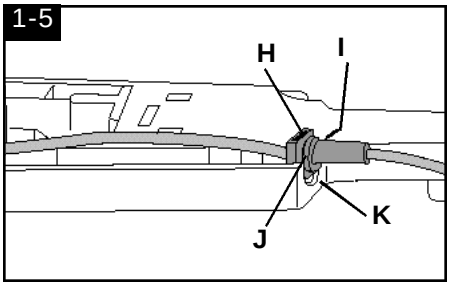

With arrow on cord protector (H) pointing toward arrow on upper handle (I), press groove (J) in cord protector into slot (K) in upper handle.

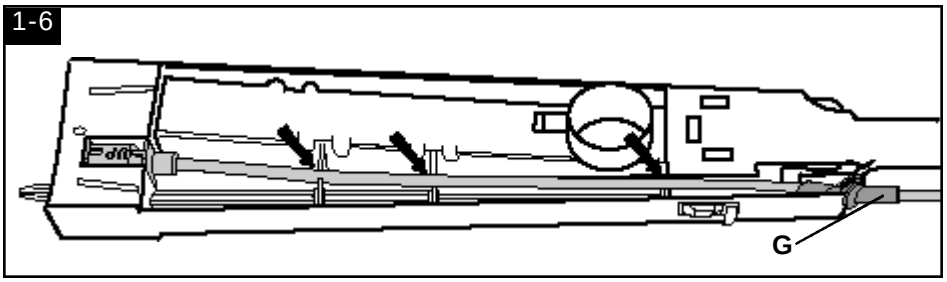

Pull cord tight.

Press cord into place at each of the three notches indicated and note correct positioning of (G).

Do not plug cleaner in until assembly is totally complete.

Continued ➜

Attach cloth outer bag

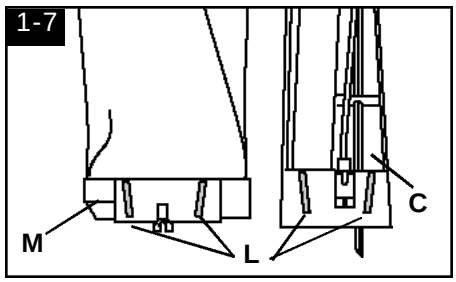

Note location of tapered rails (L) on back of outer bag base (M) and on front of lower handle (C).

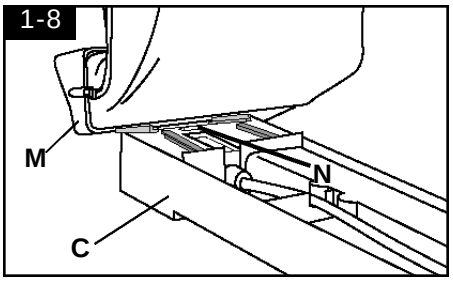

Slide rails on outer bag (M) onto rails on lower handle (C) until outer bag base snaps past the lock tab (N).

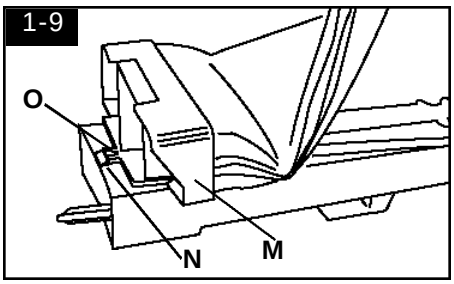

Make sure hole in outer bag base aligns with hole in handle (O).
Be sure that power cord is pulled tight and pressed into each of the three notches (Fig. 1-6) before completing the following steps.

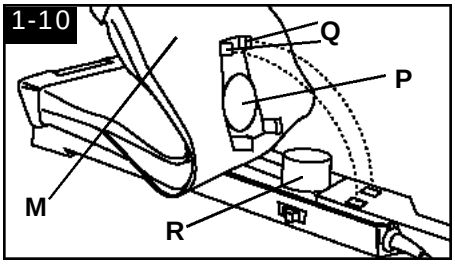

Note round opening (P) and hooks (Q) on back of outer bag (M).

Place opening over dirt tube (R). Unzip outer bag (M) and place hand inside. **Press down firmly to snap hooks into handle.**

Attach handle

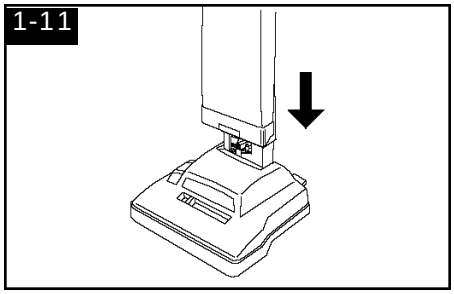

With outer bag to the front, place assembled handle onto handle base of cleaner body.

Rock handle side to side while pushing down firmly. Extra pushing effort may be required.

Press the handle release lever to move handle to the operating or middle position.

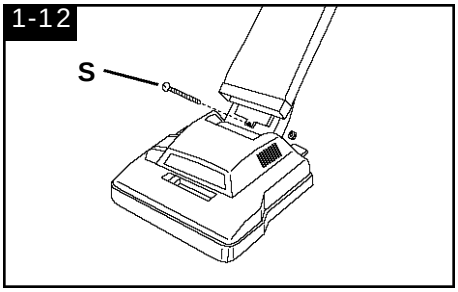

Push **bolt** (S) into hole on lower **front of handle.**

If bolt will not go through hole easily, handle is not pushed completely down.

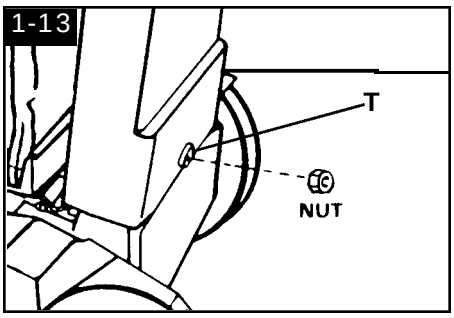

Place **nut** in recessed area (T) at **back of handle.** Hold nut in place while tightening bolt securely with a screw driver.

Note: Only one nut is needed on this model. The extra nut is not required but has been provided for your convenience.
Note: Do not hook bag clip to retainer. This will be done in a later step.

Attach filter bag

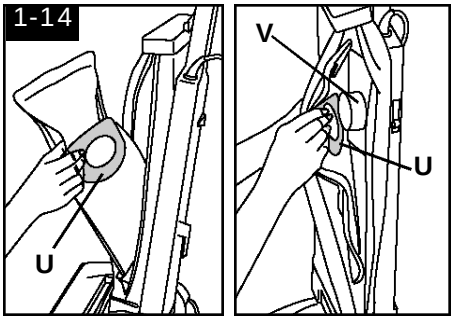

Hold filter bag collar (U) as shown. Align opening in filter bag with dirt tube (V) inside the outer bag.
Push bag collar firmly onto tube (V). Tuck in filter bag; zip outer bag.

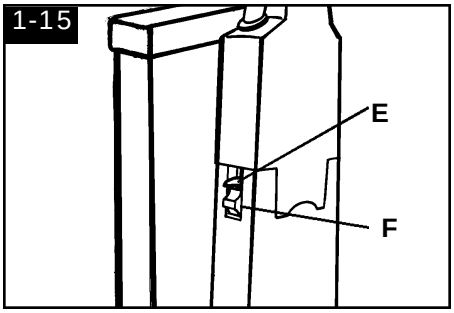

Break off red tab (E) above ON/OFF switch (F) by pushing **down** on tab. Discard tab.

Note: If tab has come off during assembly, make sure switch is in the OFF position (down) before plugging cord into an electrical outlet.

Continued ➜

Attach tool rack

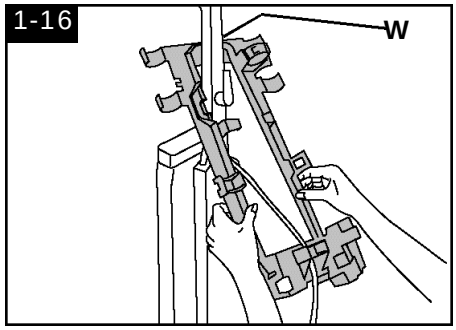

Note: Bag clip on front of handle must be unhooked from slot in bag cap before attaching tool rack (see Fig. 1-26).

With side of rack marked TOP FRONT (W) facing top of bag, pull cord through rack and lower rack over handle as shown. Slide rack down between bag and handle.

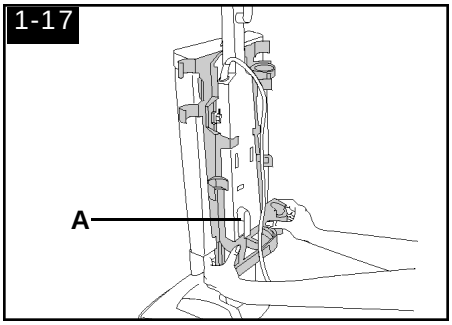

Continue to slide rack down handle until bottom of rack is below lower cord hook (A). Snap one side of rack, then the other onto lower handle.

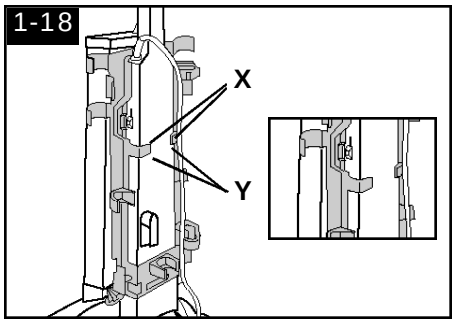

Slide rack down handle until upper hooks (X) snap into slots (Y) on handle.

Attach hose and tools

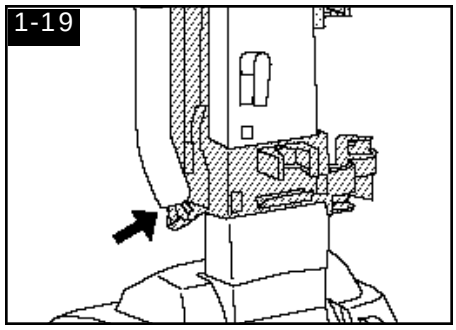

Place round end of hose over round extension on bottom of rack.

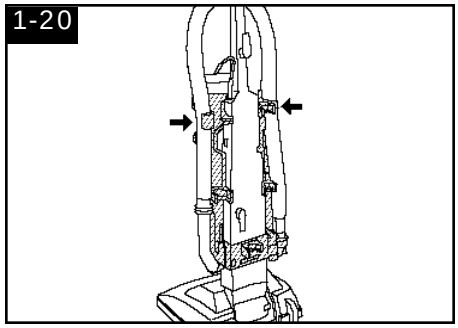

Press hose firmly into rack at upper extensions.

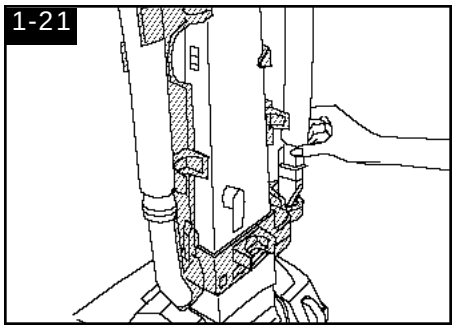

Insert hose connector, with latch toward front of cleaner, into opposite side of rack.

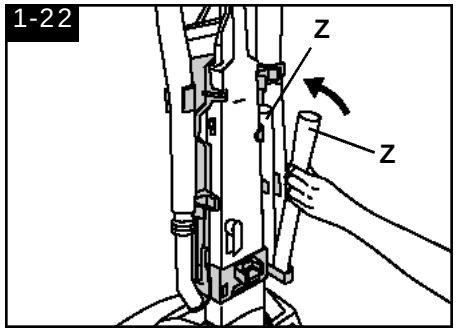

With smaller end toward bottom, snap wand (Z) into clips on rack. Second wand (Z) (some models only) fits in front of first wand and snaps into outer clips.

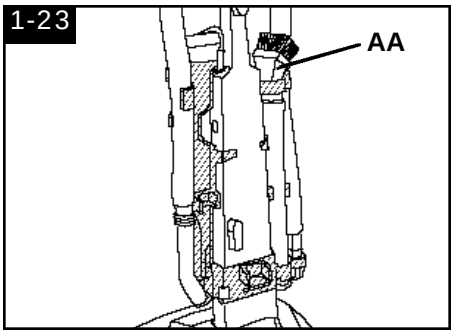

Position dusting brush (AA) into rack as shown.

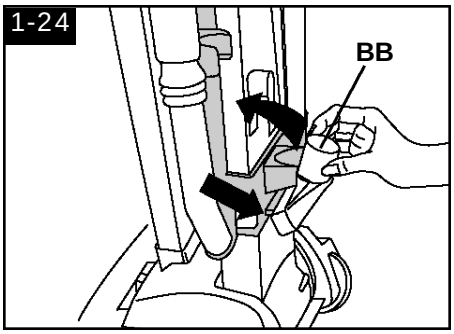

Place furniture nozzle (BB) on lip on lower part of rack and snap into place.

Continued ➜

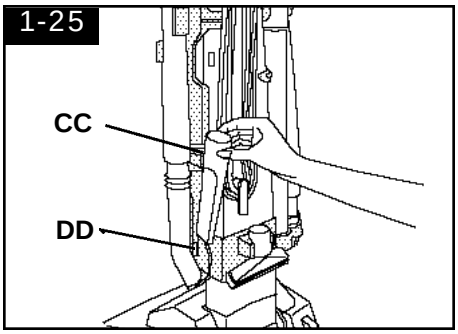

Slide crevice tool (CC) onto projection (DD). Snap into place.

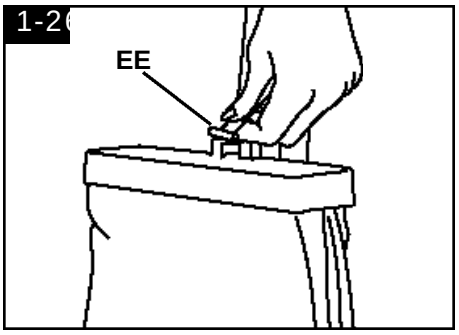

On upper front handle, grasp bag clip (EE) and pull down firmly. Hook bag clip into slot in bag cap.

CAUTION: When cleaner is turned on, the agitator continues to rotate while the handle is in the upright position. Avoid tipping cleaner or setting it on furniture, fringed area rugs, or carpeted stairs during tool use.

2. How to use

Cleaner description

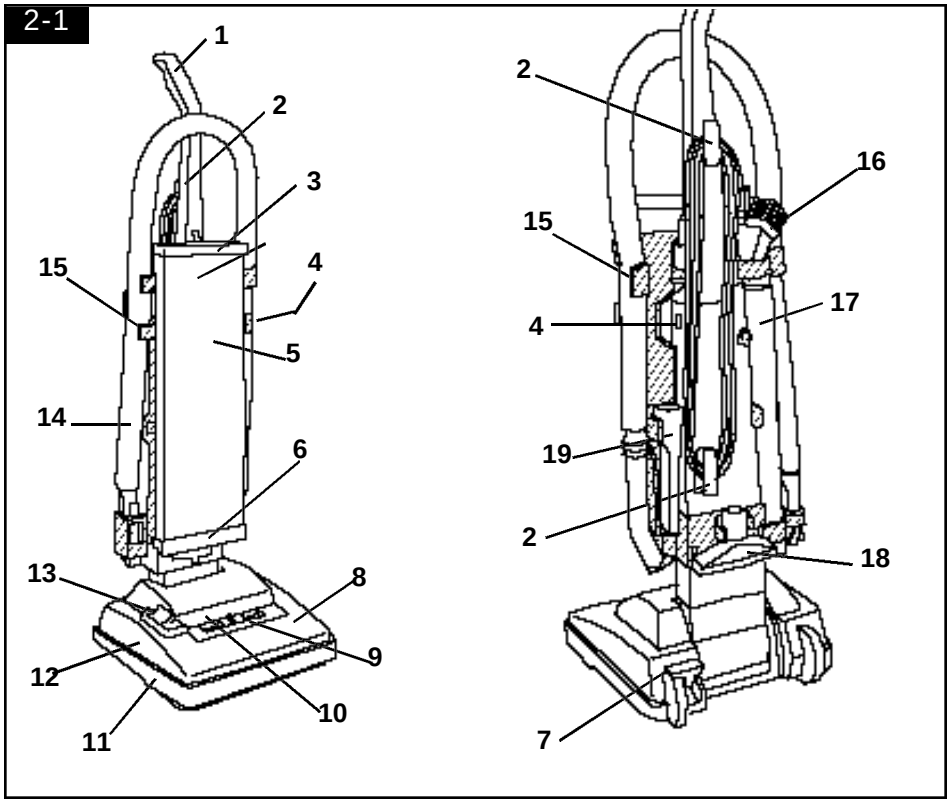

The assembled cleaner will look like the drawing.

1. **Handle**
2. **Cord hooks:** wrap cord around hooks for storage. The top hook can be rotated right or left for easy cord release.
3. **Bag Cap**
4. **ON/OFF switch:** located on side of handle
5. **Outer bag**
6. **Stair cleaning handle:** located on lower edge of bag.
7. **Handle release lever:** step on lever to lower handle to operating or low position.
8. **Cleaner body**
9. **Nozzle control knob:** slide knob to correct setting for height of carpet being cleaned.
10. **Headlight (some models)**
11. **Furniture guard:** helps prevent cleaner from marking furniture.
12. **Hood**
13. **Hose door:** open door to connect hose to cleaner.
14. **Hose**
15. **Tool rack**
16. **Dusting brush**
17. **Wand(s)**
18. **Furniture nozzle**
19. **Crevice tool**

Operate cleaner only at voltage specified on data plate on bottom of cleaner.

To reduce the risk of electric shock, this appliance has a polarized plug (one blade is wider than the other). This plug will fit in a polarized outlet only one way. If the plug does not fit fully in the outlet, reverse the plug. If it still does not fit, contact a qualified electrician to install the proper outlet. Do not change the plug in any way.

2-2

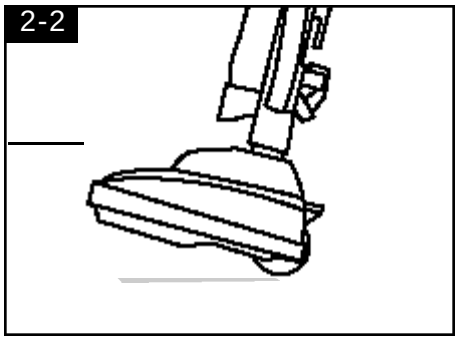

To turn cleaner on, push switch up.

To turn cleaner off, push switch down.

Plug cord into electrical outlet. Turn cleaner on and, with handle in upright position, pull back on handle until front of cleaner is lifted off the carpet. This insures that the paper bag is inflated.

2-3

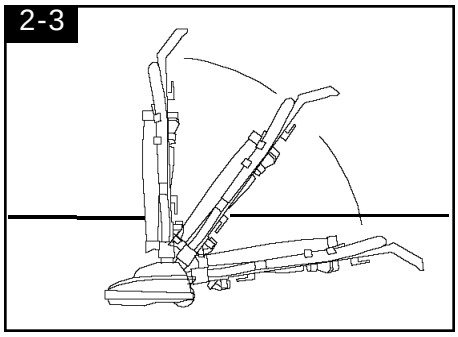

Handle positions

The handle of your cleaner has three positions; **upright** for storage and when using cleaning tools; **operating position** for general operation on carpet and floors; **low** for reaching under low furniture. Step on handle release lever to lower handle.

2-4

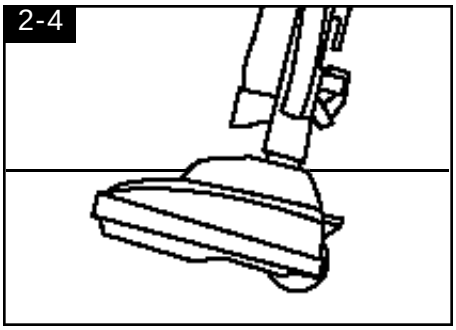

Transporting cleaner

To move your cleaner from room to room, put handle in upright position, tilt cleaner back on rear wheels, and push forward.

2-5

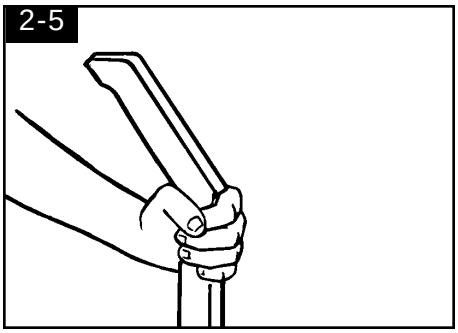

The cleaner can also be moved by lifting it as shown.

2-6

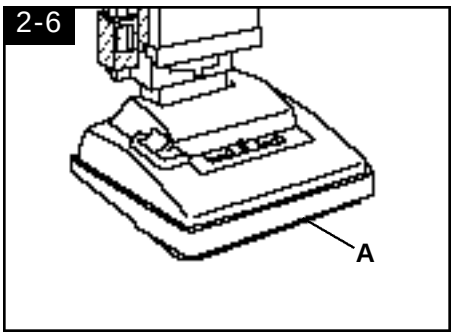

Carpet height adjustment

The cleaning of carpet and rugs takes place at the nozzle (A).

2-7

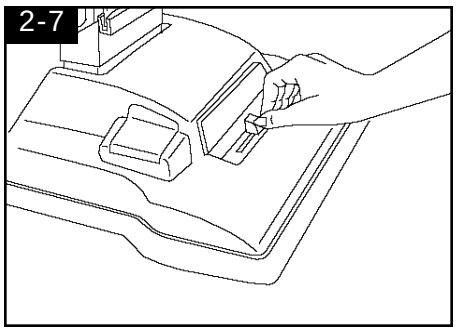

If it is necessary to raise and lower the nozzle for various carpet pile heights, slide the nozzle control knob to the desired setting.

2-8

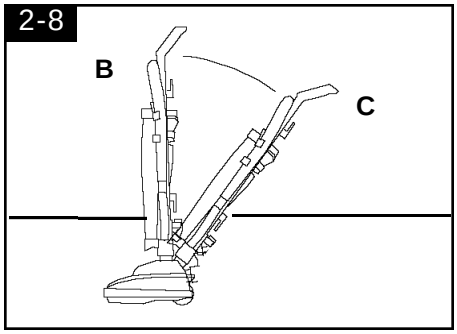

For ease in sliding knob, the handle should be in the upright position (B).

The nozzle will not move into the adjusted position until the cleaner handle is lowered to the operating position (C).

2-9

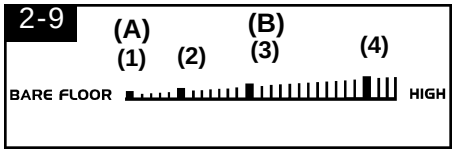

For maximum cleaning performance, the following carpet height settings are recommended.

Cleaners with Two Settings:

- **Setting 1 (A):** for bare floors and all carpet types.
- **Setting 2 (B):** if easier pushing effort is desired while maintaining good cleaning performance.

Cleaners with Four Settings:

- **Lowest setting (1):** for bare floors and low pile, level loop, kitchen type carpet.
- **Next setting (2):** for other types of carpet.
- **Higher settings (3-4):** for very deep pile carpet where easier pushing effort is desired, while maintaining good cleaning performance.

Note: If the cleaner is difficult to push, slide knob to the next higher setting.

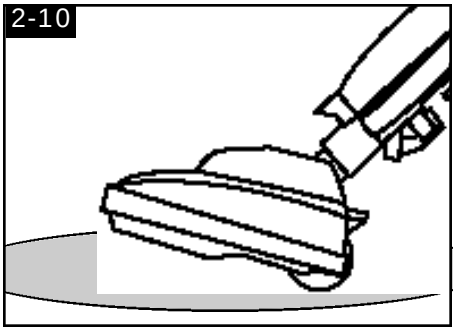

Cleaning lightweight flexible rugs

Stand on one end of rug and move cleaner toward other end or edge. Before reaching edge, push down on handle. This will lift up the nozzle (front of cleaner) and will prevent rug from clinging to cleaner. Continue to lift up nozzle so that when you have reached the edge, it is completely off the rug. Move cleaner back to start again, lower nozzle, and use only forward strokes.

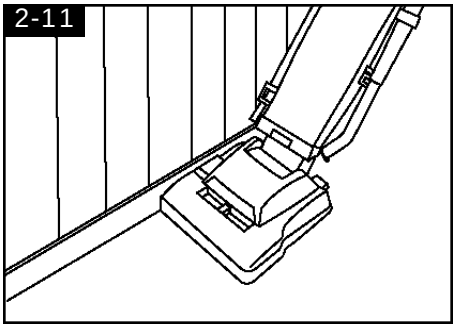

Edge cleaning

Edge cleaning is provided on both sides of nozzle to remove dirt in carpet near baseboards and furniture. Guide either side of nozzle parallel to edge of carpet or furniture.

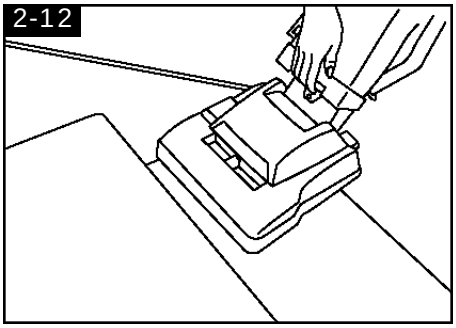

Stair cleaning

A stair cleaning handle has been designed for ease in using your cleaner on stairs. With handle in operating position, place fingers under edge of stair cleaning handle and guide cleaner with other hand on upper handle.

As an alternative, you may use the hose and furniture nozzle for stair cleaning, cleaning from bottom to top.

When using cleaning tools, the agitator will continue to rotate.

CAUTION: To avoid personal injury or unnecessary wear to carpet, and to prevent the cleaner from falling, use extra care if cleaner is placed on stairs.

Cleaning tools

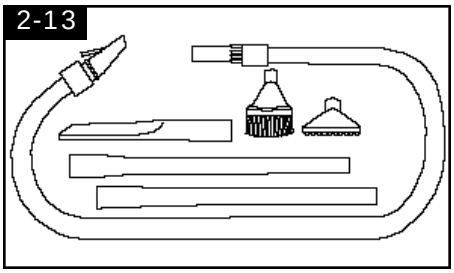

Tool set includes a hose, wand(s)*, crevice tool, furniture nozzle and dusting brush.
*some models include two wands

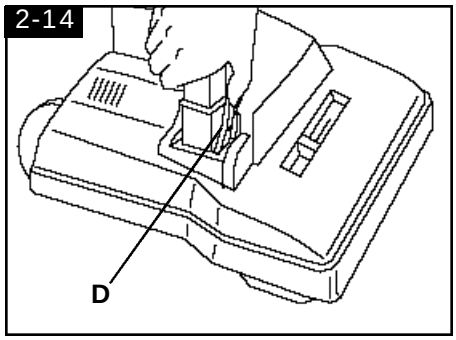

Attach hose to cleaner

Turn cleaner off before attaching or removing hose.

With cleaner handle in **upright position,** open hose door and insert hose connector until locked in position. Suction will automatically be diverted to the hose when cleaner is turned on.

To remove hose, press latch (D) on hose connector and pull up.

Note: Hose must be removed from hose door when cleaning carpet and rugs to insure proper cleaning performance.

CAUTION: Agitator continues to rotate while cleaner handle is in upright position. Avoid tipping cleaner or setting it on furniture, fringed area rugs or carpeted stairs.

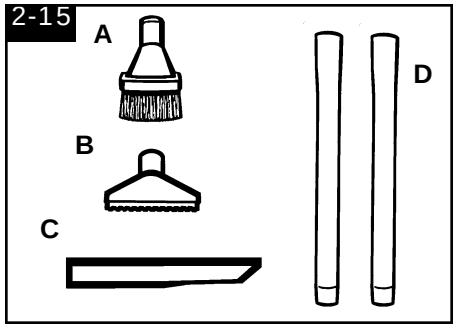

Select proper tool

A. Dusting brush may be used for carved furniture, table tops, books, lamps, lighting fixtures, venetian blinds, baseboards, shutters, and registers.

B. Furniture nozzle may be used for upholstered furniture, draperies, mattresses, clothing, automobile interiors, and carpeted stairs.

C. Crevice tool may be used in tight spaces, corners and along edges in such places as dresser drawers, upholstered furniture, stairs, and baseboards.

D. Wand(s)* are used to give extra length to your hose. Use them with any of the above tools.

*Some models include two wands.

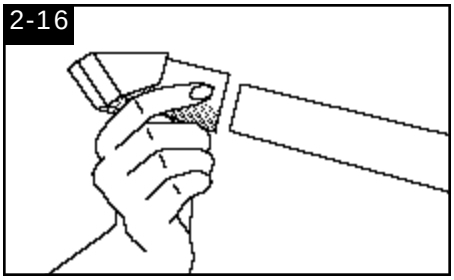

Attach wand and tools

The tools are attached to the hose or the wand in the same manner. Push tool firmly onto hose; twist tool slightly to tighten or loosen connection.

Use cleaning tools with cleaner handle in upright position.

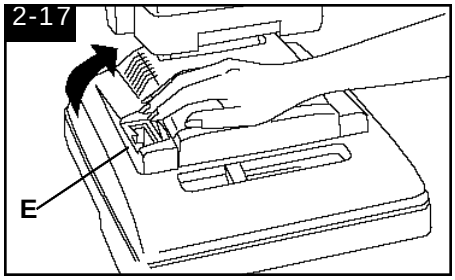

Clearing blockages

To check for obstructions, first **turn cleaner off and disconnect from electrical outlet; then disconnect hose from cleaner.** Open hose door (E) and carefully remove any visible obstruction. If no obstruction is found, check hose and tools. Remove obstruction. To continue using tools, re-attach hose to cleaner. If no obstruction is found and a problem persists, contact your Hoover Factory Service Center or Authorized Warranty Service Dealer (Depot).

How to clean tools

To clean the hose, wipe off dirt with a cloth dampened in a liquid detergent. Rinse with a damp cloth. Cleaning tools may be washed in warm water with a detergent. Rinse and air dry before using.

3. Maintenance

Familiarize yourself with these home maintenance tasks as proper use and care of your cleaner will ensure continued cleaning effectiveness.

The filter bag

When to replace

Check filter bag from time to time. It is recommended that you change the filter bag when dirt reaches the dotted line. If more dirt than this accumulates, your cleaner may not operate effectively.

CAUTION: Very fine materials, such as face powder, cornstarch, fireplace ashes or fireplace soot, may seal the filter bag and may cause it to burst even though it is only partially full of dirt. When cleaner is used to remove material of this nature, change filter bag often.

Where to buy

Filter bags may be purchased from your Authorized Hoover Dealer (Depot) or from a Hoover Factory Service Center. **When ordering filter bags, be sure to give the model number of your cleaner.**

What to buy

For improved cleaning effectiveness, use only **Genuine HOOVER® Allergen Filtration Type A** disposable filter bags. Regular **HOOVER® Type A** disposable filter bags also fit your cleaner.

To assure that your cleaner operates at peak performance, it is imperative that you use only genuine HOOVER filter bags made by The Hoover Company. HOOVER bags can be identified by these trademarks –

Hoover®

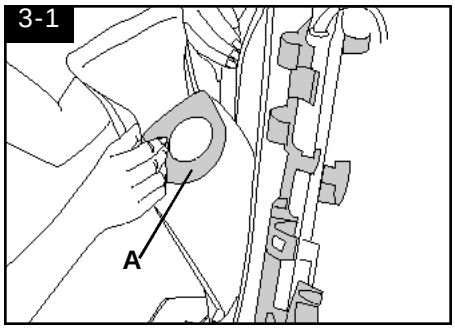

How to replace

Disconnect cleaner from electrical outlet.

To change filter bag, unzip outer bag, grasp sides of filter bag collar (A) and pull collar from tube.

Note: Do not clean out old filter bag and reuse. Discard used filter bag.

Continued ➜

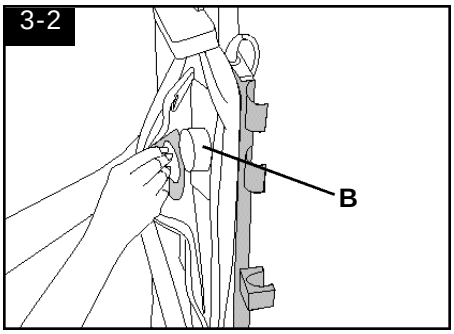

Hold new filter bag as shown. Align opening in filter bag with dirt tube (B). Push bag collar (A) **firmly** onto tube (B).

Tuck in filter bag; zip outer bag.

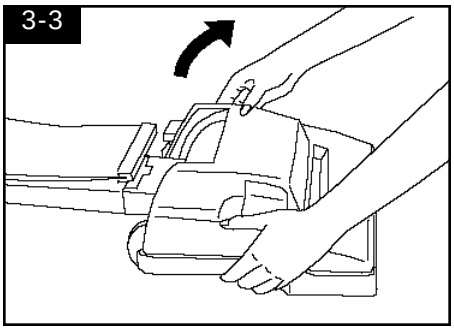

The headlight

(some models)

What to buy

This cleaner uses a 12 volt, wedge base type 912 bulb, Hoover **part No. 27313-101**

How to replace

Disconnect cleaner from electrical outlet.

To remove hood, follow steps for Figs. 3-10 to 3-14 of **"How to replace belt".**

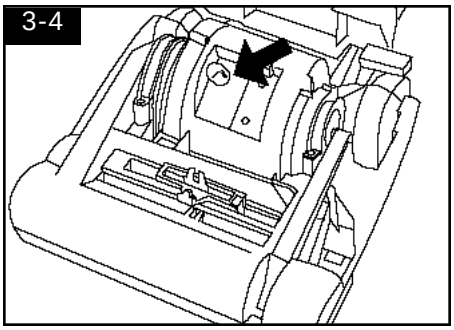

Remove bulb by pulling straight out of socket; push bulb into socket until it locks in place.

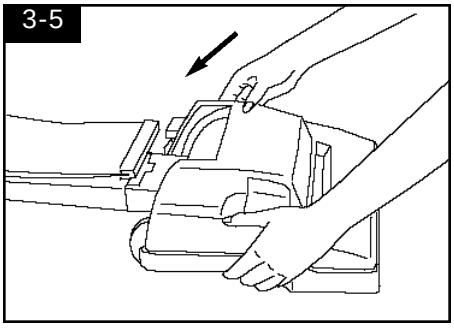

Place hood on cleaner body and press firmly to snap all four latches. Pull up on hood slightly to make sure all four latches are secured.

Push nozzle control knob back onto front of cleaner.

The belt

The belt on your HOOVER cleaner causes the agitator to rotate and is important for the effective operation of the cleaner. The belt is located under the bottom plate of the cleaner and should be checked from time to time to be sure it is in good condition.

When to replace

To check belt, remove bottom plate and hood as shown in "How to replace belt." Replace belt if it is stretched, cut or broken.

What to buy

To assure effective operation, use only genuine HOOVER belts with your cleaner. When purchasing a new belt, ask for Hoover **part No. 40201190.**

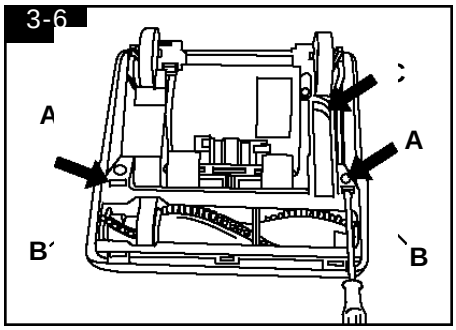

How to replace

Disconnect cleaner from electrical outlet.

Place handle in operating position and turn cleaner over so bottom side is up.

To remove bottom plate remove screws (A), insert end of flat screwdriver into wide area of right-hand slot (B) and push handle of screwdriver to the rear. Repeat in left-hand slot (B).

Lift extension (C) of bottom plate, rotate plate and remove from cleaner body.

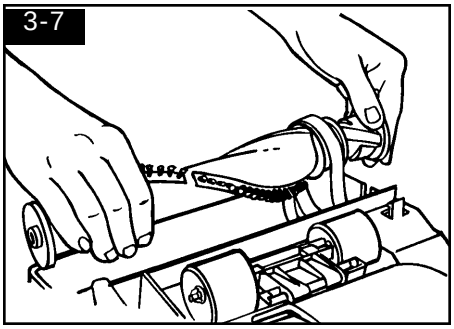

Remove agitator and broken agitator belt.

(If belt is not broken but is stretched or cut, proceed with steps for Figs. 3-10 to 3-13 and pull belt off motor pulley. Then continue with Fig. 3-8).

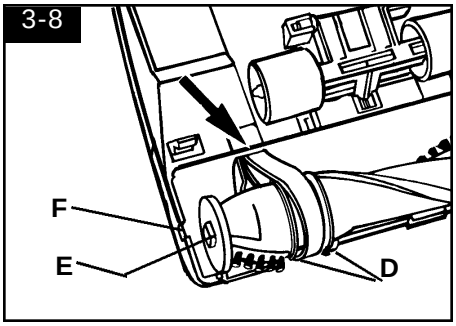

Slip agitator through new belt **(with lettering toward outside of cleaner)** and position belt in belt guide (D). Push end of belt into opening in cleaner body.

Reposition agitator making sure to align flat sides of projection (E) on belt end of agitator with flat sides of slot (F) in cleaner body.

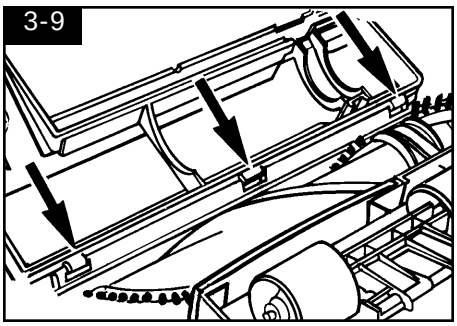

Place the three tabs on bottom plate into slots in front of cleaner body. Snap bottom plate into place over agitator.

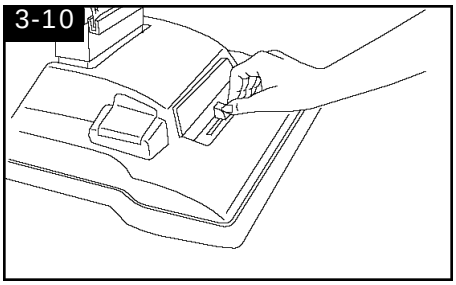

Remove hood by turning cleaner over and removing nozzle control knob on front of hood - grasp knob and pull up.

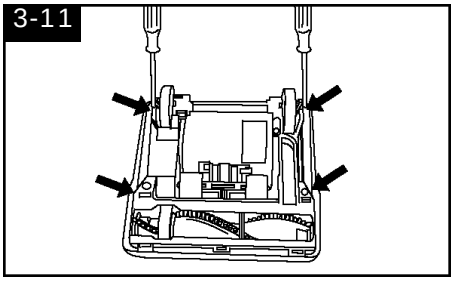

Place handle in operating position and turn cleaner over. Insert end of flat screwdriver into one of the four slots beside an arrow on bottom of cleaner.

For slots nearest rear wheels, push handle of screwdriver toward cleaner handle; for remaining two slots, pry outward to release latches.

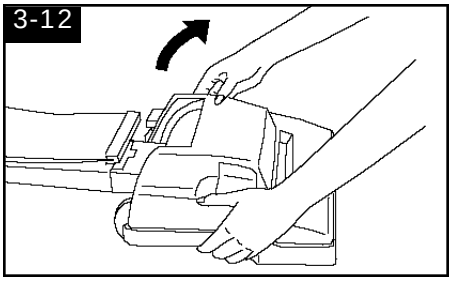

Turn cleaner over and lift off hood.

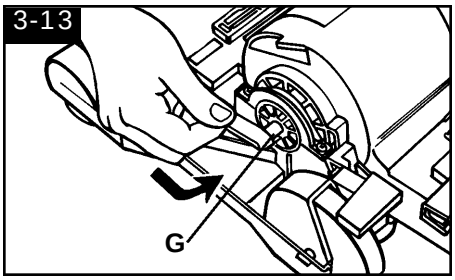

Stretch new belt onto motor pulley (G). **Extra effort may be required to stretch belt onto pulley.**
Turn agitator, making sure belt is not pinched between agitator and cleaner body. The belt must rotate freely inside the belt guide. If the agitator does not turn, remove bottom plate and reposition belt in the belt guide.

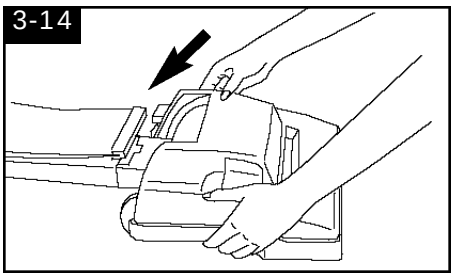

Replace hood and nozzle control knob.

Continued ➜

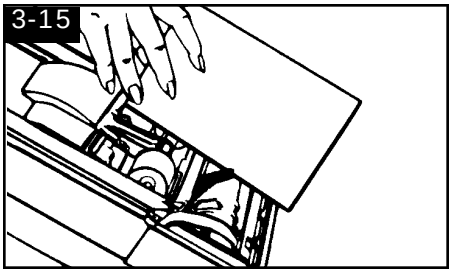

The agitator

When to replace

Disconnect cleaner from electrical outlet

When agitator brushes are worn, the agitator should be replaced.

To check condition of brushes, move edge of a card across bottom plate while turning agitator. To maintain cleaning effectiveness, replace agitator if brushes do not touch card.

What to buy

The agitator may be replaced with either a single or double row of brushes.

Single row of brushes - Hoover part **No. 48414-051.**

Double row of brushes - Hoover part **No. 48414-049.**

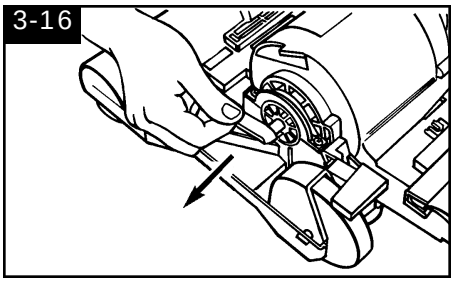

How to replace

Disconnect cleaner from electrical outlet.

Remove hood as shown in Figs. 3-10 to 3-12 of **"How to replace belt".**

Pull belt off motor pulley as shown.

Remove bottom plate, belt and agitator as shown in Figs. 3-6 & 3-7 of **"How to replace belt".**

If you have a problem

If a minor problem occurs, it usually can be solved quite easily when the cause is found by using the checklist below.

Problem: Cleaner won't run

Possible cause
Possible solution

- **Not firmly plugged in**
- *Plug unit in firmly*
- **No voltage in wall plug**
- *Check fuse or breaker*
- **Blown fuse/tripped breaker**
- *Replace fuse/reset breaker*

Problem: Cleaner won't pick up

Possible cause
Possible solution

- **Broken or worn belt**
- *Replace belt*
- **Brush roll brushes worn**
- *Replace brush roll*
- **Filter bag full**
- *Change filter bag*
- **Incorrect carpet height setting**
- *Move nozzle control to type of carpet being cleaned*

Problem: Cleaning tools won't pick up

Possible cause
Possible solution

- **Hose clogged**
- *Remove hose and tools; remove obstruction*
- **Hose connector inserted incorrectly**
- *Re-insert hose connector properly*

Problem: Cleaner hard to push

Possible cause
Possible solution

- **Incorrect carpet height setting**
- *Move nozzle control knob to a higher setting*

Lubrication

The motor is equipped with bearings that contain sufficient lubrication for the life of the motor. The addition of lubricant could cause damage. **Therefore, do not add lubricant to motor bearings.**

The agitator is equipped with two ball bearings that should be lubricated periodically by a Hoover Factory Service Center or an Authorized Hoover Warranty Service Dealer (Depot).

Service

To obtain approved HOOVER service and genuine HOOVER parts, locate the nearest **Hoover Factory Service Center or Authorized Hoover Warranty Service Dealer (Depot)** by:

- checking the Yellow Pages under "Vacuum Cleaners - Household" OR
- checking the list of Factory Service Centers provided with this cleaner OR
- visiting us on-line at **www.hoover.com** to find the service outlet nearest you (click on "Service" button) OR
- calling 1-800-944-9200 for an automated referral of authorized service outlet locations (U.S. only).

Do not send your cleaner to The Hoover Company in North Canton for service, this will only result in delay.

If further assistance is needed, contact The Hoover Company Consumer Response Center, North Canton, Ohio 44720, Phone: 330-499-9499.

In Canada, contact Hoover Canada, Burlington, Ontario L7R4A8, Phone: 1-800-263-6376.

Always identify your cleaner by the **complete** model number when requesting information or ordering parts. (The model number appears on the bottom of the cleaner.)

Hoover Cleaning Performance

This Hoover Cleaning Performance System is for comparing the relative progressive performance of **Hoover uprights only** and not for comparison with any other brands. The majority of this rating is based upon the American Society for Testing and Materials (ASTM) Carpet Cleaning Effectiveness Testing (ASTM Test F608). Other performance factors include Hose Power (ASTM Test F558), Surface Litter Cleaning, Hard Floor Cleaning, Edge Cleaning, Air Filtration and Cleaning Width.

Full One Year Warranty

(Domestic Use)

Your HOOVER ® appliance is warranted in normal household use, in accordance with the Owner's Manual against original defects in material and workmanship for a period of one full year from date of purchase. This warranty provides, at no cost to you, all labor and parts to place this appliance in correct operating condition during the warranted period. This warranty applies when the appliance is purchased in the United States including its territories and possessions, or in Canada or from a U.S. Military Exchange. Appliances purchased elsewhere are covered by a limited one year warranty which covers the cost of parts only. This warranty does not apply if the appliance is used in a commercial or rental application.

Warranty service can only be obtained by presenting the appliance to one of the following authorized warranty service outlets. Proof of purchase will be required before service is rendered.

1. **Hoover Factory Service Centers**
2. **Hoover Authorized Warranty Service Dealers (Depots)**

For an automated referral of authorized service outlets in the U.S.A., phone 1-800-944-9200.

This warranty does not cover pick up, delivery, or house calls; however, if you mail your appliance to a Hoover Factory Service Center for warranty service, transportation will be paid one way.

While this warranty gives you specific legal rights, you may also have other rights which vary from state to state.

If further assistance is needed, or if there are questions concerning this warranty or the availability of warranty service outlets, write or phone the Consumer Response Center, The Hoover Company, 101 East Maple St., North Canton, Ohio 44720.
Phone 1-330-499-9499

In Canada, contact Hoover Canada, Burlington, Ontario L7R4A8, 1-800-263-6376.